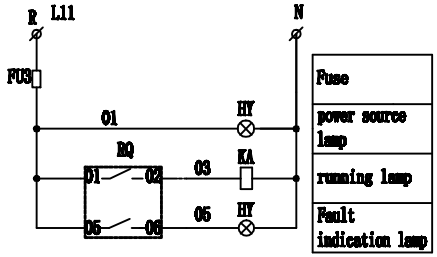

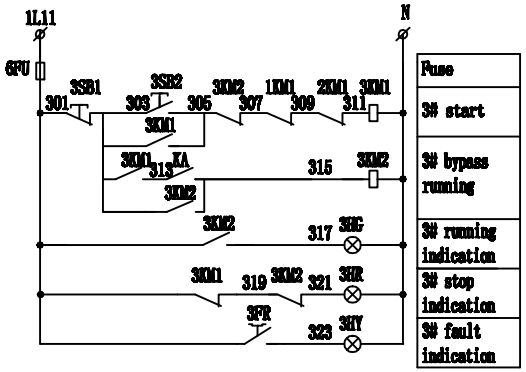

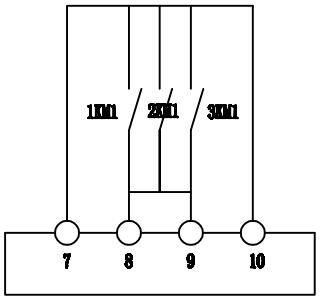

soft starter terminals wiring

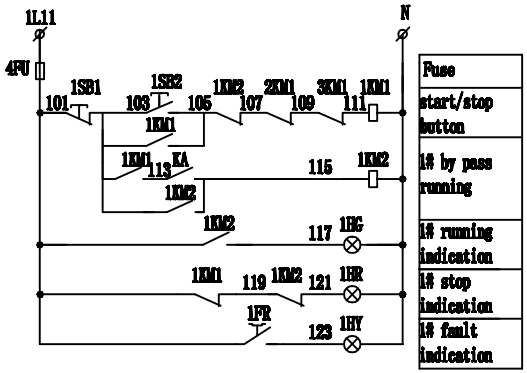

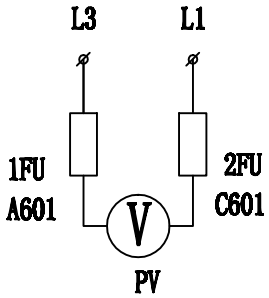

voltage circuit

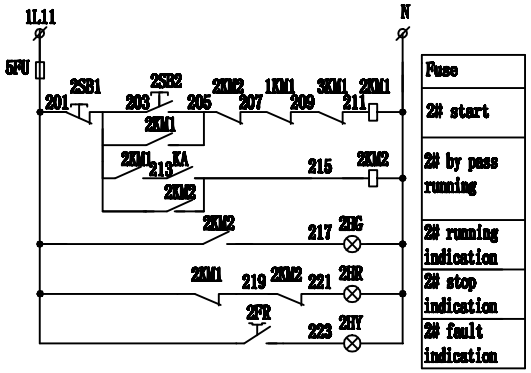

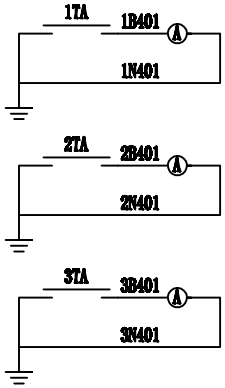

current circuit

soft starter system decription:
1 drive 3 manual switch sytem starting theory:
1. each motor could be seperately started, no limit for the sequence.
2. it suggests starting interval time above 60 seconds.

soft starter system diagram one drive theree, manual switch sytem control circuit diagram	EM-GS series
	China EM Technology Limited